IND. GUTTER SYSTEM WITHOUT ROOF FLANGE

Typical Gutter Components / Assembly

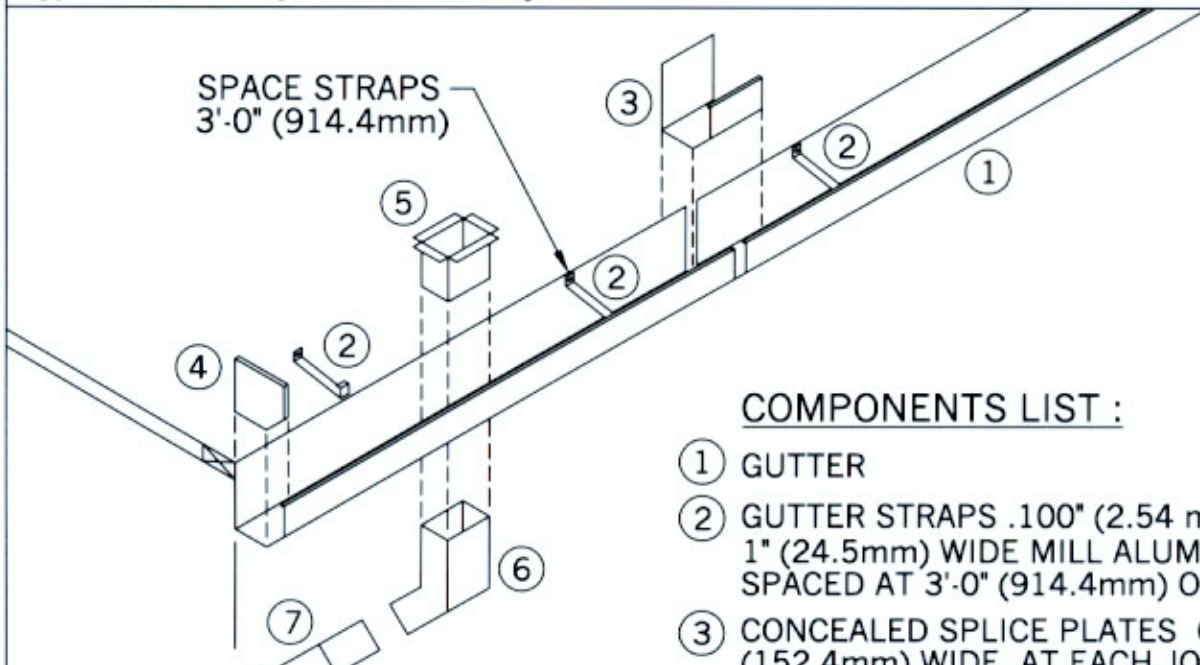

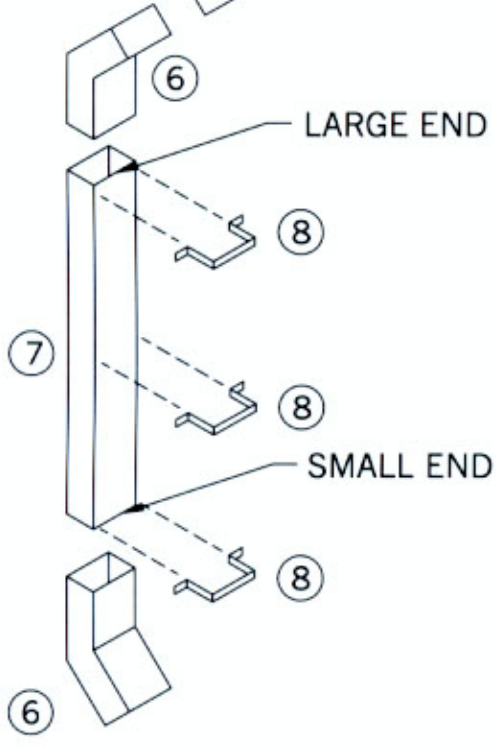

COMPONENTS LIST :

1. GUTTER
2. GUTTER STRAPS .100" (2.54 mm) X 1" (24.5mm) WIDE MILL ALUM. SPACED AT 3'-0" (914.4mm) O.C.
3. CONCEALED SPLICE PLATES 6" (152.4mm) WIDE, AT EACH JOINT
4. END CAP (FIELD RIVET AND CAULK)
5. OUTLET (FIELD RIVET AND CAULK)
6. ELBOWS
7. DOWNSPOUT
8. DOWNSPOUT STRAPS

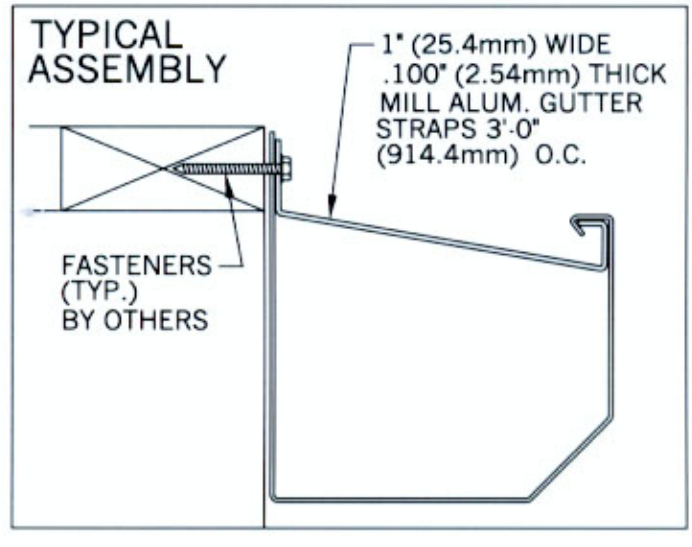

NATIONAL
SHEET METAL SYSTEMS, INC.

WWW.NATIONALSHEETMETAL.COM
TOLL FREE : 1-877-GET-METL (OFFICE)
1-866-298-NSMS (FAX)
2964 Alcove Drive, Scottdale, GA 30079-0923
Ph# (404) 298-9710 Fax# (404) 298-9720